FROM HE 200 TO HE240	121	PR20105
FROM HE 260 TO HE320	221	PR20961

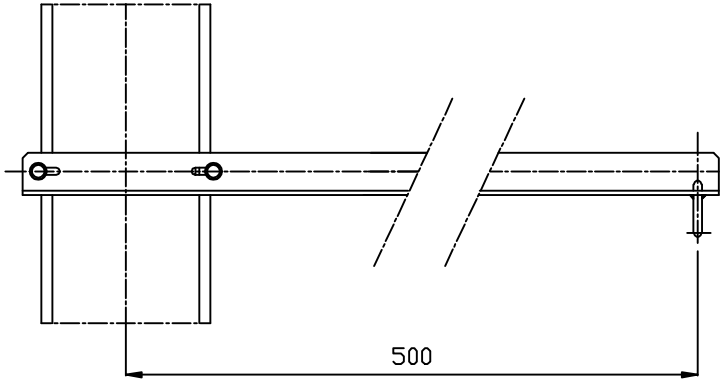

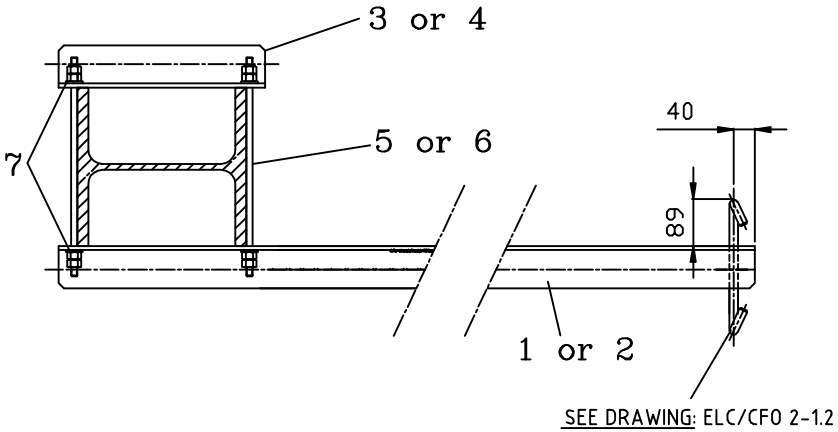

QUANTITY							
	4	4	7	WASHER M16	0.03	03LC00BDG142	16A110
	2		6	THREADED ROD M16-400/100	0.63	03LC00BDG141	1611D2
		2	5	THREADED ROD M16-350/100	0.55	03LC00BDG141	1611C2
	1		4	COUNTERPLATE FOR OPTICAL FIBER ANCHORING	3.94	03LC00BDG113	221
		1	3	COUNTERPLATE FOR OPTICAL FIBER ANCHORING	3.17	03LC00BDG113	121
	1		2	SUPPORT FOR OPTICAL FIBER ANCHORING	7.17	03LC00BDG107	221
		1	1	SUPPORT FOR OPTICAL FIBER ANCHORING	6.78	03LC00BDG107	121
MARK GROUP	221	121	ITEM	DESIGNATION	UNIT MASS kg	REFERENCE DRAWING	MARK

Proiectat		Material:	20105;20961
Desenat			Inlocuieste desen nr. :
Verificat			Nr. inventar :
Contr.STAS			
Aprobat			
DIRECTIA INDUSTRIE		Scara:	OPTICAL FIBER BRACKET ANCHORING BDG056
		Data:	CONSOLA F.O. DE ANCORARE PE STALP H240;320

Pag.