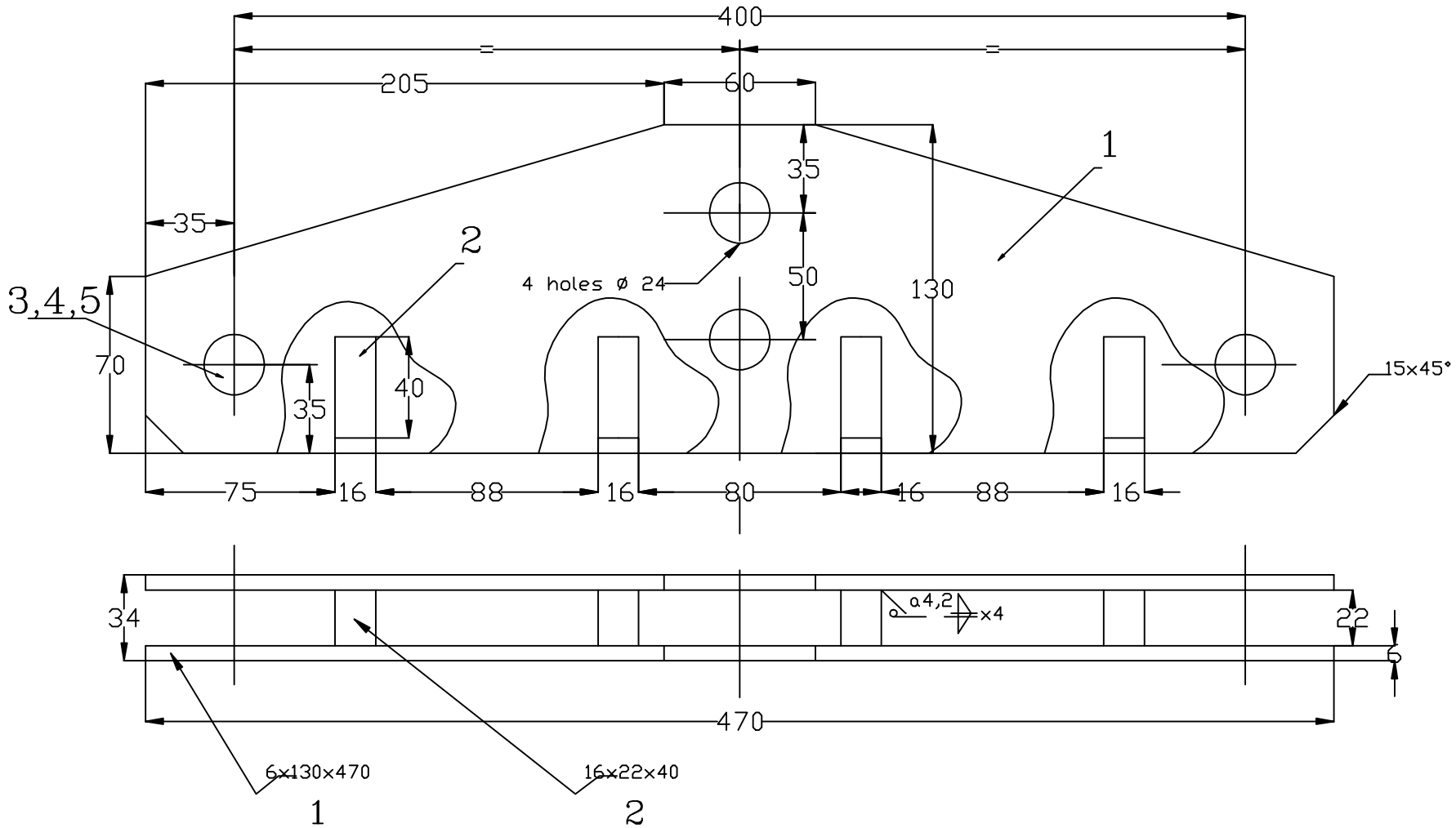

NOTE:
After welding and drilling will be hot galvanized AT/OL/Zn600-STAS 7221-90.

ITEM	DESIGNATION	UNIT	MATERIAL TECHNICAL SPECIFICATION
5	SPLINT 4.5	2	
4	WASHER A22	2	
3	CATCH PIN ø22	2	
2	SPACER	3	S235JR
1	PLATE	1	S235JR

Proiectat		Material:	20143
Desenat			Inlocuieste desen nr. :
Verificat			Nr. inventar :
Contr.STAS			
Aprobat			

Pag.

DIRECTIA INDUSTRIE

Scara:

Data:

3 PIN CLEVIS – BDG179

BALANCIER