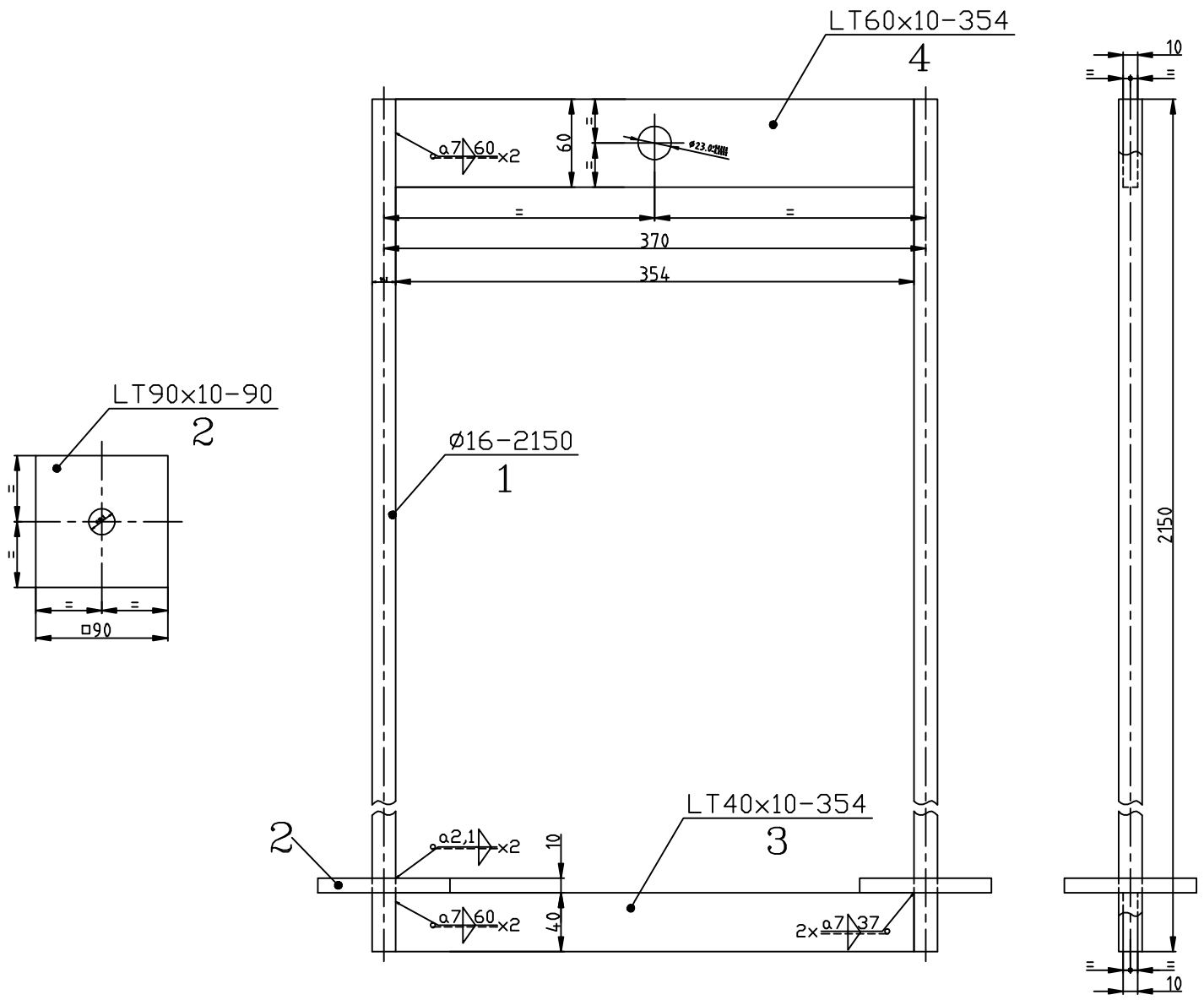

NOTE:
Will be hot galvanized AT/OL/Zn500-STAS 7221-90.

MARK	GROUP	QUANTITY	ITEM	DESIGNATION	UNIT MASS kg	MATERIAL TECHNICAL SPECIFICATION
	1	4		UPPER BAR		S235JR
	1	3		LOWER BAR		S235JR
	2	2		PLATE		S235JR
	2	1		ROD		S275JR

Proiectat		Material:	20335
Desenat			Inlocuieste desen nr. :
Verificat			Nr. inventar :
Contr.STAS			
Aprobat			

Pag.

DIRECTIA INDUSTRIE

Scara:

Data:

CADRE FOR CONCRETE COUNTERWEIGHTS – BDG201

CADRU CONTRAGREUTATI R3/1