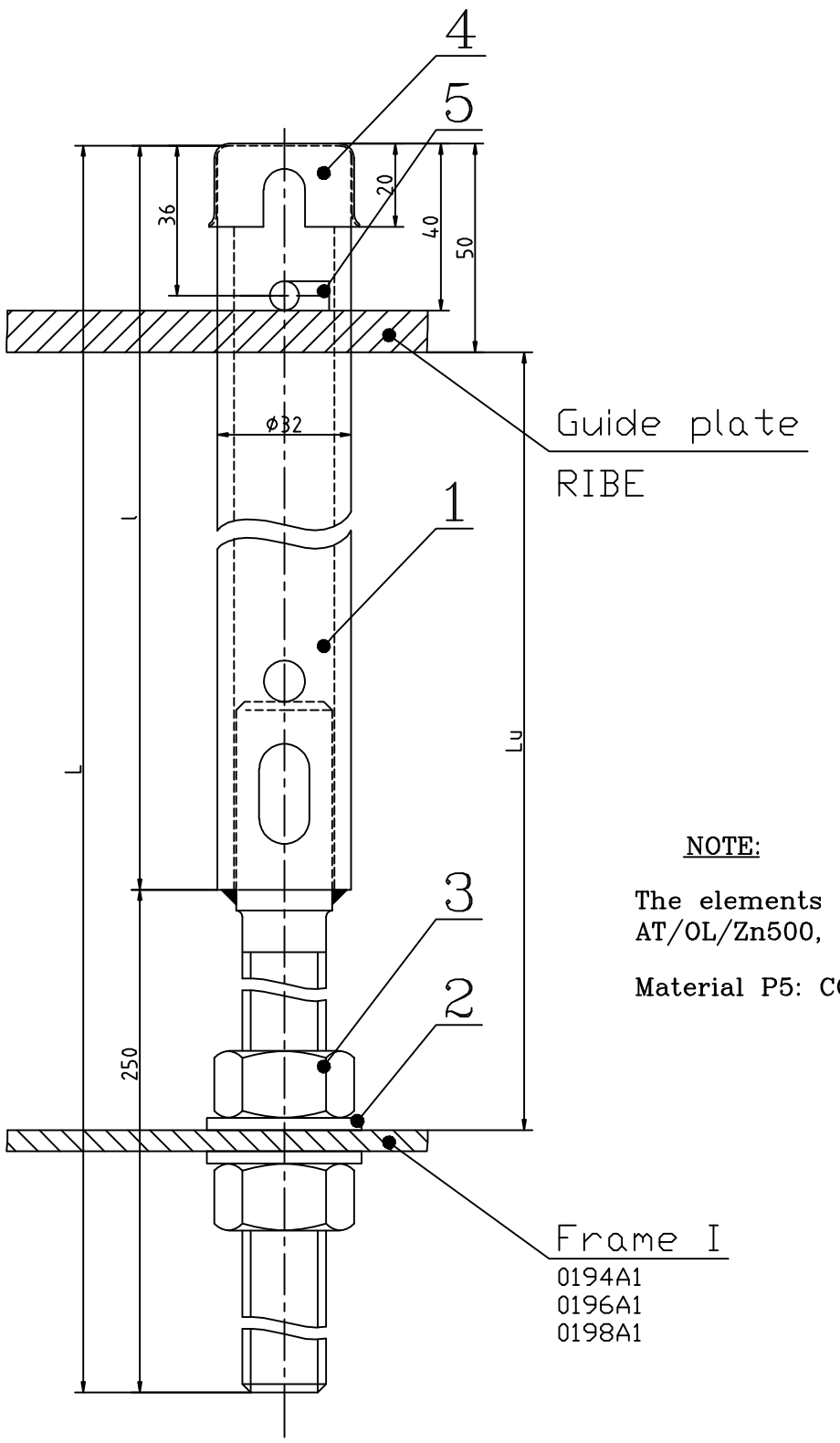

	Mark	Hfc	L	l	Lu
	101	5650-5500	5900	5650	5600-5750
	102	5750-5600	6000	5750	5700-5850
PR23037	103	5850-5700	6100	5850	5800-5950
	104	5950-5800	6200	5950	5900-6050
PR20336	105	6050-5900	6300	6050	6000-6150
	106	6150-6000	6400	6150	6100-6250
	107	6250-6100	6500	6250	6200-6350
	108	6350-6200	6600	6350	6300-6450
	109	6450-6300	6700	6450	6400-6550
	110	6550-6400	6800	6550	6500-6650

NOTE:

The elements 2 and 3 will be hot galvanized AT/OL/Zn500, except the threader AT/OL/Zn310.

Material P5: COOPER

MARK GROUP	QUANTITY	ITEM	DESIGNATION	UNIT MASS kg	REFERENCE DRAWING	MARK
	1	5	Split 5x70 (32B70)		03LC00BDG145	32B070
	1	4	Cover		03LC00BDG191	
	2	3	NUT M20		SR EN ISO 4032-2002	
	2	2	WASHER T20		03LC00BDG142	20A110
	1	1	BAR		03LC00BDG188	

Proiectat		Material:	20336;23037
Desenat			Inlocuieste desen nr. :
Verificat			Nr. inventar :
Contr.STAS			
Aprobat			
DIRECTIA INDUSTRIE		Scara:	GUIDEWAY – BDG1787
		Data:	TEAVA DE GHIDARE

Pag.