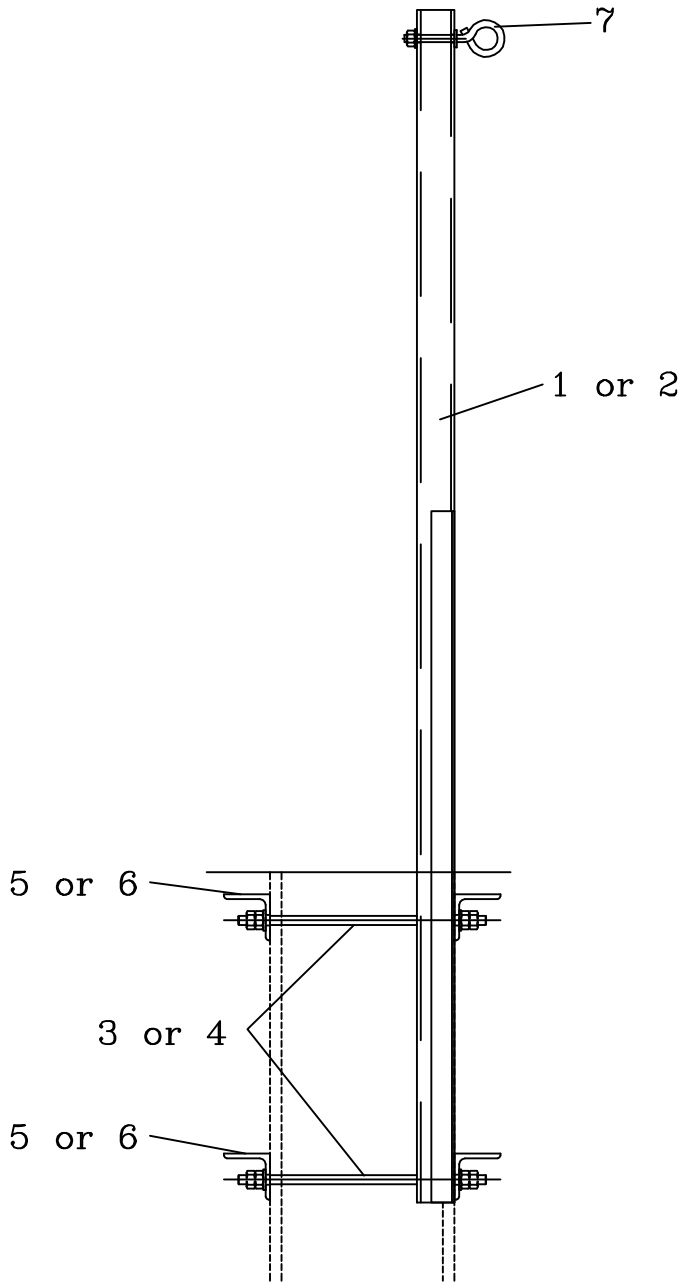

FROM HE 200 TO HE240	101	PR20471
FROM HE 260 TO HE320	102	PR21105

QUANTITY							
	1	1	7	SUPPORT RING TYPE II	.024	ELC/CFO 3-15.0	
	2		6	COUNTERPLATE FOR OPTICAL FIBER	3.85	03LC00BDG087	204
		2	5	COUNTERPLATE FOR OPTICAL FIBER	3.08	03LC00BDG087	104
	4		4	THREADED ROD M12-400/100	0.35	03LC00BDG141	1211D2
		4	3	THREADED ROD M12-350/100	0.30	03LC00BDG141	1211C2
	1		2	SUPPORT FOR OPTICAL FIBER	28.00	03LC00BDG252	102
		1	1	SUPPORT FOR OPTICAL FIBER	26.34	03LC00BDG252	101
MARK GROUP	102	101	ITEM	DESIGNATION	UNIT MASS kg	REFERENCE DRAWING	MARK

Proiectat	Material:	20471;21105	Pag.
Desenat			
Verificat		Inlocuieste desen nr. :	
Contr.STAS		Nr. inventar :	
Aprobat			
DIRECTIA INDUSTRIE	Scara:	SURELEVATED SUPPORT FOR OPTICAL FIBER WITH RING – BDG250	
	Data:	VARFAR CU CARLIG TIP II H240;320	