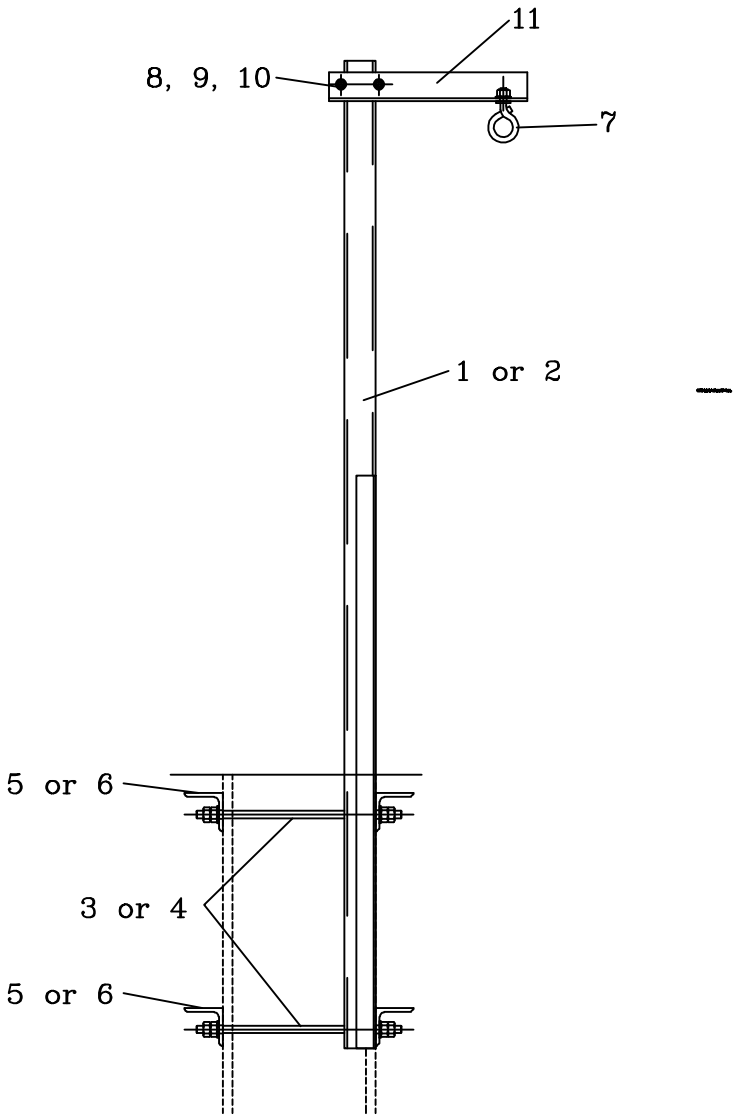

FROM HE 200 TO HE240	101	PR20472
FROM HE 260 TO HE320	102	

QUANTITY			ITEM	DESIGNATION	UNIT MASS kg	REFERENCE DRAWING	MARK
1	1	11		COUNTERPLATE	2.25	03LC00BDG254	
2	2	10		WASHER M12	0.03	SR EN 7089/4	
4	4	9		NUT M12-gr8	0.02	SR EN ISO 4032	
1	1	8		STRUT	0.26	03LC00BDG253	
1	1	7		PULLEY SUPPORT RING (TYPE A)	0.24	ELC/CFO 3-15.0 B	
2		6		COUNTERPLATE FOR OPTICAL FIBER	3.85	03LC00BDG087	204
	2	5		COUNTERPLATE FOR OPTICAL FIBER	3.08	03LC00BDG087	104
4		4		THREADED ROD M12-400/100	0.35	03LC00BDG141	1211D2
	4	3		THREADED ROD M12-350/100	0.30	03LC00BDG141	1211C2
1		2		SUPPORT FOR OPTICAL FIBER	28.00	03LC00BDG252	102
	1	1		SUPPORT FOR OPTICAL FIBER	26.34	03LC00BDG252	101
MARK GROUP 102	MARK GROUP 101						

Proiectat	Material:	20472	Pag.
Desenat			
Verificat		Inlocuieste desen nr. :	
Contr.STAS		Nr. inventar :	
Aprobat			
DIRECTIA INDUSTRIE	Scara:	SURELEVATED SUPPORT FOR OPTICAL FIBER WITH PULLEY – BDG251	
	Data:	VARFAR CU TRAVERSA STALP H240;320	