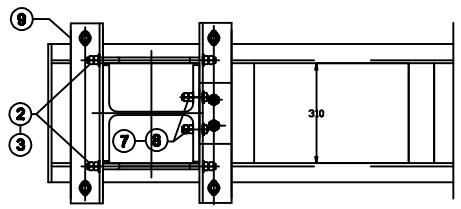

NOTE
For the remote position of antilifting
(side track or opposite of side track)
see mounting diagram

101

DETAIL

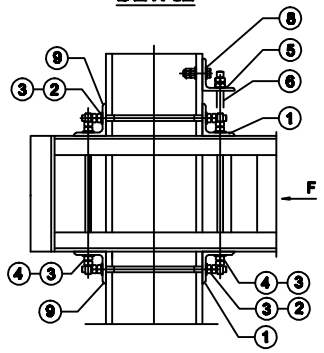

VIEW F

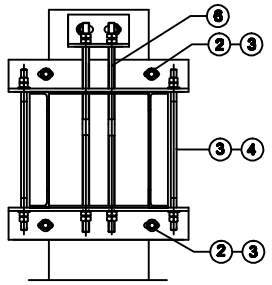

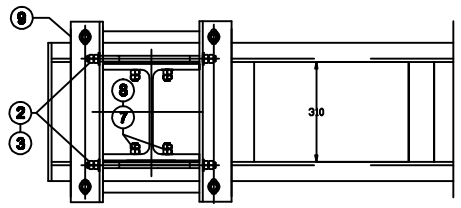

NOTE
For the remote position of antilifting
(side track or opposite of side track)
see mounting diagram

102

DETAIL

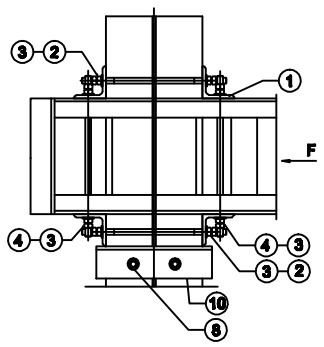

VIEW F

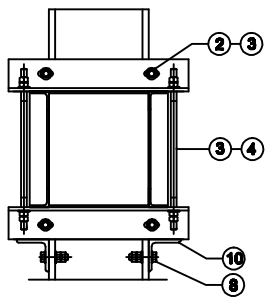

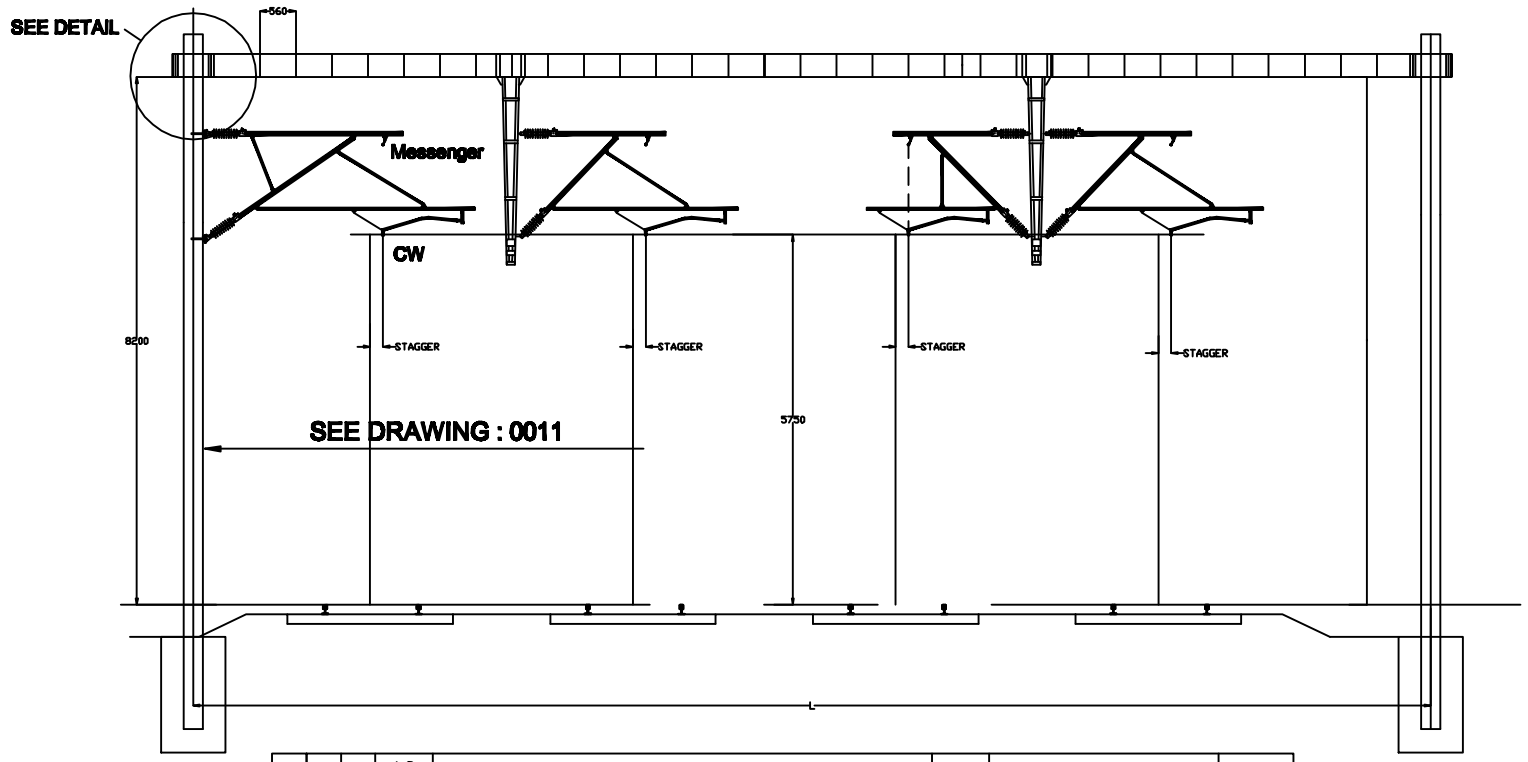

MARK GROUP	102	101	ITEM	DESIGNATION	UNIT MASS kg	REFERENCE DRAWING	MARK
QUANTITY	2	-	10	COUNTERPLATE		03LC00BDG122	104
	-	2	9	COUNTERPLATE		03LC00BDG122	103
	4	2	8	WASHER M20N		03LC00BDG142	20A110
	4	2	7	BOLT HM 20x75/46		03LC00BDG144	2013N2
	-	2	6	THREADED ROD 20x750/300		03LC00BDG141	2011L7
	-	1	5	COUNTERPLATE		03LC00BDG122	102
	4	4	4	THREADED ROD 20x500/100		03LC00BDG141	2011F2
	16	16	3	WASHER M20N		03LC00BDG142	20A110
	4	4	2	THREADED ROD 20x450/100		03LC00BDG141	2011E2
	4	2	1	COUNTERPLATE		03LC00BDG122	101

Proiectat		Material:	20776	Pag.
Desenat			Inlocuieste desen nr. :	
Verificat			Nr. inventar :	
Contr.STAS				
Aprobat				
DIRECTIA INDUSTRIE		Scara:	ASSEMBLIES GANTRY BEAM ON MAST – BDG121	
		Data:	CAP REAZEM STALP H-RASUCIT	