	L			
	350	600	1000	1500
FROM HE 200 TO HE240	101	102	103	104
	PR20097	PR20098	PR20099	PR20101
FROM HE 260 TO HE320	201	202	203	204
	PR20786	PR20395	PR20785	PR20787

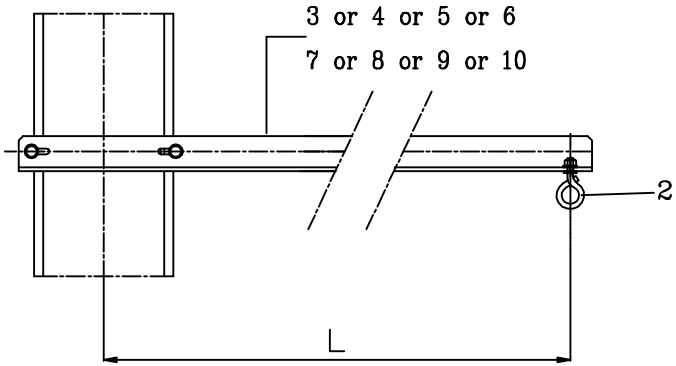

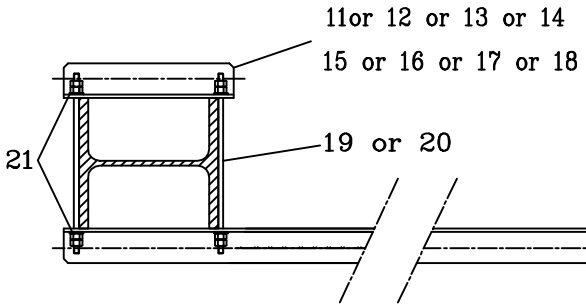

QUANTITY													
4	4	4	4	4	4	4	4	21	WASHER M12	0.03	03LC00BDG142	12A110
2	2	2	2					20	THREADED ROD M12-400/100	0.35	03LC00BDG141	1211D2
				2	2	2	2	19	THREADED ROD M12-350/100	0.30	03LC00BDG141	1211C2
1								18	COUNTERPLATE FOR OPTICAL FIBER	3.85	03LC00BDG087	204
	1							17	COUNTERPLATE FOR OPTICAL FIBER	1.78	03LC00BDG087	203
		1						16	COUNTERPLATE FOR OPTICAL FIBER	0.84	03LC00BDG087	202
			1					15	COUNTERPLATE FOR OPTICAL FIBER	0.84	03LC00BDG087	201
				1				14	COUNTERPLATE FOR OPTICAL FIBER	3.08	03LC00BDG087	104
					1			13	COUNTERPLATE FOR OPTICAL FIBER	1.43	03LC00BDG087	103
						1		12	COUNTERPLATE FOR OPTICAL FIBER	0.67	03LC00BDG087	102
							1	11	COUNTERPLATE FOR OPTICAL FIBER	0.67	03LC00BDG087	101
1								10	SUPPORT FOR OPTICAL FIBER L=1500	16.37	03LC00BDG086	204
	1							9	SUPPORT FOR OPTICAL FIBER L=1000	5.36	03LC00BDG086	203
		1						8	SUPPORT FOR OPTICAL FIBER L=600	1.68	03LC00BDG086	202
			1					7	SUPPORT FOR OPTICAL FIBER L=350	1.15	03LC00BDG086	201
				1				6	SUPPORT FOR OPTICAL FIBER L=1500	15.98	03LC00BDG086	104
					1			5	SUPPORT FOR OPTICAL FIBER L=1000	5.18	03LC00BDG086	103
						1		4	SUPPORT FOR OPTICAL FIBER L=600	1.59	03LC00BDG086	102
							1	3	SUPPORT FOR OPTICAL FIBER L=350	1.07	03LC00BDG086	101
1	1	1	1	1	1	1	1	2	PULLEY SUPPORT RING (TYPE A)	0.24	ELC/CFO 3-15.0 B	
MARK GROUP	204	203	202	201	104	103	102	101	ITEM	DESIGNATION	UNIT MASS kg	REFERENCE DRAWING	MARK

Proiectat	Material:	20789;20395;20785;20787;20097; 20098;20099;20101	Pag.
Desenat			
Verificat		Inlocuieste desen nr. :	
Contr.STAS			
Aprobat		Nr. inventar :	
DIRECTIA INDUSTRIE	Scara:	OPTICAL FIBER BRACKET BDG 054	
	Data:	CONSOLA PT. FIBRA OPTICA	